704 South 10th Street, Blue Springs, MO 64015
(816) 229-3405
www.fike.com

60-1039
Intelligent Heat Detector

Specifications

Normal Operating Voltage:	15 to 30 VDC
Standby Current:	215 μA max. @ 24 VDC (continuous broadcasts)
LED Current:	2 mA max. @ 24 VDC (LEDs on)
Operating Humidity Range:	10% to 93% Relative Humidity Non-condensing
Installation Temperatures:	–4°F to 100°F (–20°C to 38°C); 135°F–174°F setpoint
	–4°F to 150°F (–20°C to 66°C); 175°F–190°F setpoint
Fixed Temperature Rating:	135°F (57°C)–190°F (88°C); programmable
Rate of Rise Detection:	Responds to greater than 15°F/min.(8°C/mm); programmable
Height:	2.1 inches (51 mm)
Diameter:	6.1 inches (155 mm) installed
	4.1 inches (104 mm) installed
Weight:	4.8 ounces (137 g)

Before Installing

This detector must be installed in compliance with the control panel system installation manual. The installation must meet the requirements of the Authority Having Jurisdiction (AHJ). Detectors offer maximum performance when installed in compliance with the National Fire Protection Association (NFPA); see NFPA 72.

Product Description

Model 60-1039 is an intelligent, spot-type heat detector, designed to be programmable for a setpoint range of 135°F–174°F for ordinary detection or 175°F–190°F for intermediate detection. Detectors in the ordinary range may be programmed for either fixed or 15°F rate of rise operation. Detectors set between 135°F–155°F or 175°F–190°F are designed 50 foot spacing. Detectors set between 156°F–174°F are designed for 15 foot spacing.

The detector is designed with tri-color LEDs to indicate detector status. The detector can be programmed to make the LEDs blink or be steady green, amber, or red. The detector remote output can be configured to follow the LED or be independently controlled. A remote LED annunciator is available as an accessory (RA400Z).

Wiring Guide

Resistive Valve	Branch Number
33k ohm	5
15k ohm	4
6.8k ohm	3
2.2k ohm	2
100*	1

*Use of 100 ohm resistor precludes operation of RA.

All wiring must be installed in compliance with the National Electrical Code, applicable local codes and the Authority Having Jurisdiction (AHJ). Proper wire gauges should be used. The installation wires should be color coded to limit wiring mistakes and ease system troubleshooting. Improper connections will prevent a system from responding properly in the event of a fire.

1. Wire the detector base (supplied separately) per the wiring diagram, see Figure 1.
2. Install the detector into the base. Push the detector into the base while turning it clockwise to secure it in place.
3. Set the desired address using the IR configuration tool (model no. EA-CT).
4. Test the detector as described in the TESTING section of this manual.

Figure 1. Wiring diagram:

CAUTION: Do not loop wire under terminal 1, 2 or 3. Break wire run to provide supervision of connections.

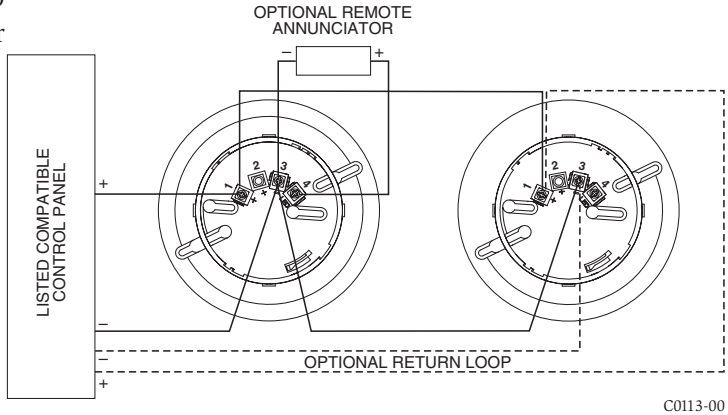

Tamper Resistance

The detector bases have a tamper-resistant capability. When this capability is enabled, detector cannot be removed from the base without the use of a tool. Refer to the detector base installation instruction manual for details in using this capability.

Testing

Before testing, notify the proper authorities that the system is undergoing maintenance, and will temporarily be out of service. Disable the system to prevent unwanted alarms.

The detector can be tested in the following ways:

A. Functional:

This detector can be functionally tested by using the EA-CT. Following the instructions, initiate the detector test sequence. the detector should alarm the fire alarm control panel. Refer to the control panel technical documentation for detector LED status operation and expected delay to alarm.

B. Direct Heat:

A hair dryer, heat gun, or test apparatus designed for this purpose should be used to test the sensing circuit. Direct the heat toward the thermistor, using care to avoid damaging the plastic housing. The detector will reset only after if has had sufficient time to cool.

Detectors that fail these tests should be cleaned as described under CLEANING and retested. If the detectors still fail these tests they should be returned for repair.

Cleaning

NOTE: Before cleaning notify the proper authorities that the system is undergoing maintenance, and therefore the system will temporarily be out of service. Disable the loop or system undergoing maintenance to prevent unwanted alarms.

It is recommended that the detector be removed from its mounting base for easier cleaning and that detectors be cleaned at least once a year. Use a vacuum cleaner to remove dust from the sensing chamber.

Figure 2.

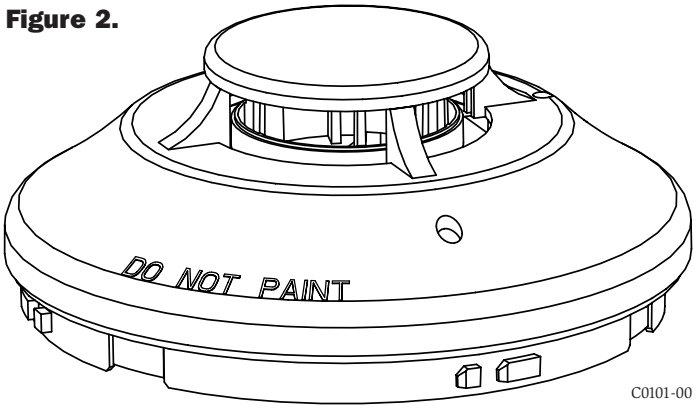

Please refer to insert for the Limitations of Fire Alarm Systems

FCC Statement

This device complies with part 15 of the FCC Rules. Operation is subject to the following two conditions: (1) This device may not cause harmful interference, and (2) this device must accept any interference received, including interference that may cause undesired operation.

Note: This equipment has been tested and found to comply with the limits for a Class B digital device, pursuant to Part 15 of the FCC Rules. These limits are designed to provide reasonable protection against harmful interference in a residential installation. This equipment generates, uses and can radiate radio frequency energy and, if not installed and used in accordance with the instructions, may cause harmful interference to radio communications. However, there is no guarantee that interference will not occur in a particular installation. If this equipment does cause harmful interference to radio or television reception, which can be determined by turning the equipment off and on, the user is encouraged to try to correct the interference by one or more of the following measures:

– Reorient or relocate the receiving antenna.
– Increase the separation between the equipment and receiver.
– Connect the equipment into an outlet on a circuit different from that to which the receiver is connected.
– Consult the dealer or an experienced radio/TV technician for help.